LEGEND:

FLOW DIRECTION — WATER FLOW

SILT FENCE

VEHICLE SHAKE DOWN

HAY BALES

EROSION & SEDIMENTATION CONTROL NOTES

1. CONTRACTOR SHALL PROVIDE SEDIMENT FENCING MATERIAL DURING CONSTRUCTION TO THE LOW SIDE OF THE WORKS. TIE SEDIMENT FENCING MATERIAL TO CYCLONE WIRE SECURITY FENCE. SEDIMENT CONTROL FABRIC SHALL BE AN APPROVED MATERIAL (EG. HUMES PROPEX SILT STOP) STANDING 300mm ABOVE GROUND & EXTENDING 150mm BELOW GROUND.
2. EXISTING DRAINS LOCATED WITHIN THE SITE SHALL ALSO BE ISOLATED BY SEDIMENT FENCING MATERIAL OR A STRAW BALE SEDIMENT FENCE.
3. NO PARKING OR STOCKPILING OF MATERIALS IS PERMITTED ON THE LOWER SIDE OF THE SEDIMENT FENCE.
4. GRASS VERGES SHALL BE MAINTAINED AS MUCH AS PRACTICAL TO PROVIDE A BUFFER ZONE TO THE CONSTRUCTION SITE.
5. CONSTRUCTION ENTRY/EXIT SHALL BE VIA THE LOCATION NOTED ON THE DRAWING. CONTRACTOR SHALL ENSURE ALL DROPPABLE SOIL & SEDIMENT IS REMOVED PRIOR TO CONSTRUCTION TRAFFIC EXITING SITE. CONTRACTOR SHALL ENSURE ALL CONSTRUCTION TRAFFIC ENTERING & LEAVING THE SITE DO SO IN A FORWARD DIRECTION.

GENERAL NOTES

1. THIS PLAN IS A CONCEPT PLAN ONLY FOR STORMWATER DISPOSAL & EROSION CONTROL. THIS PLAN SHOULD BE ADAPTED BY THE BUILDER DURING DEMOLITION, EXCAVATION & CONSTRUCTION PHASES TO ENSURE ADEQUATE PERFORMANCE.

   ALL DRAINAGE LAYOUT & DETAILS ARE DIAGRAMMATIC & INDICATIVE ONLY.
2. ACTUAL LOCATION, SIZES, LEVELS & GRADES TO BE DETERMINED ON SITE.

CLAY SOILS

A SYSTEM SHALL BE INSTALLED TO EITHER:

1. TRANSPORT STORMWATER RUNOFF WITH SUSPENDED SOLIDS FROM SITE VIA DUMP TRUCKS.
2. TREAT THE STORMWATER RUNOFF WITH SUSPENDED SOLIDS SO THE DISCHARGE WATER QUALITY TO COUNCIL STORMWATER DRAINAGE SYSTEM HAS A MAXIMUM CONCENTRATION OF SUSPENDED SOLIDS THAT DOES NOT EXCEED 50 MILLIGRAMS PER LITRE IN ACCORDANCE WITH THE PROTECTION OF THE ENVIRONMENT OPERATION ACT (POEO 1997) AND SHALL BE APPROVED BY LOCAL COUNCIL

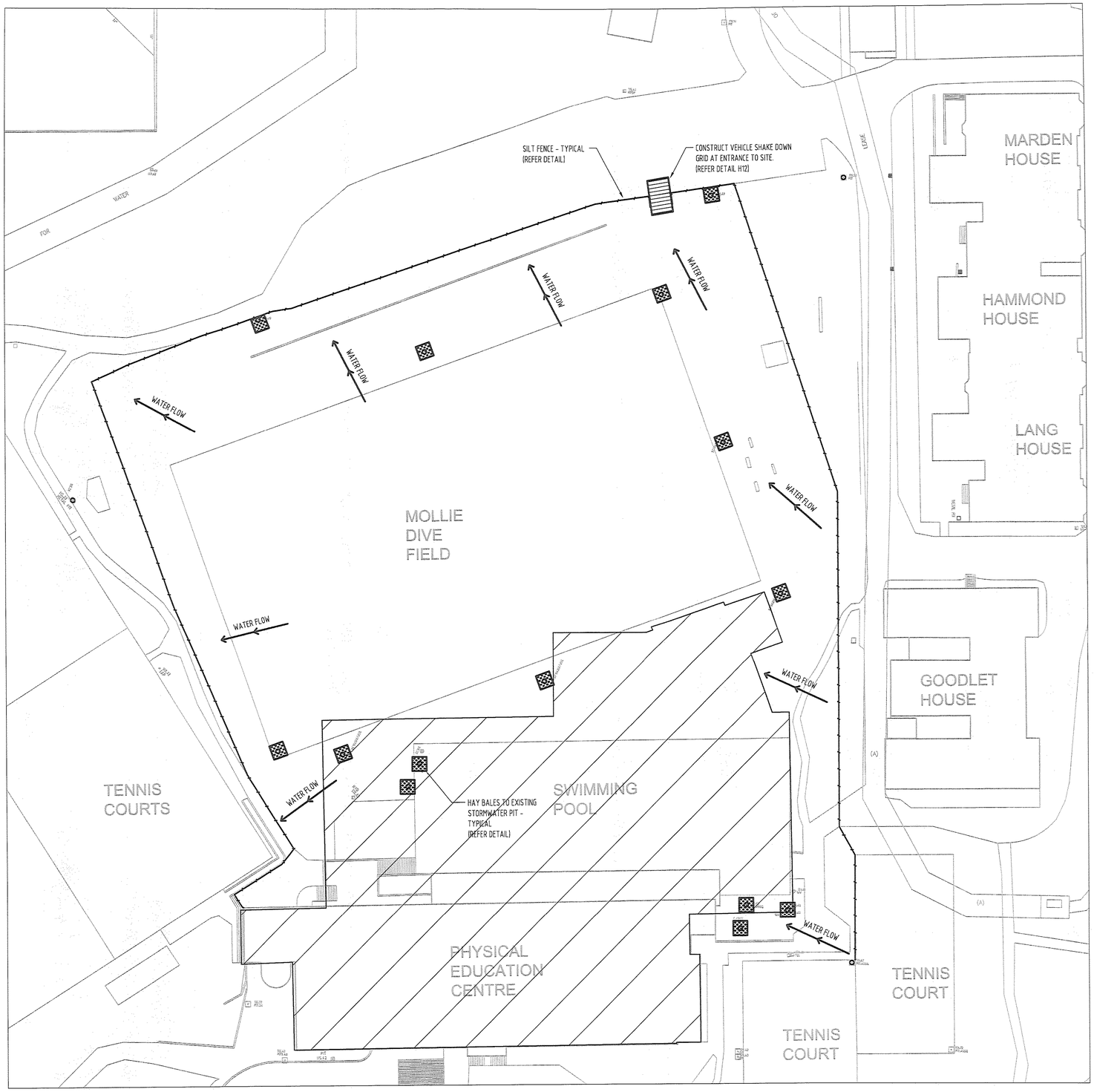

SEDIMENT & EROSION CONTROL PLAN

SCALE 1:400

0 5 10 15 20 25 50

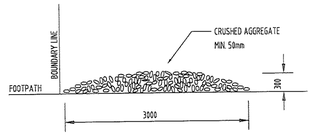

VEHICLE DUST SHAKE DOWN

N.T.S

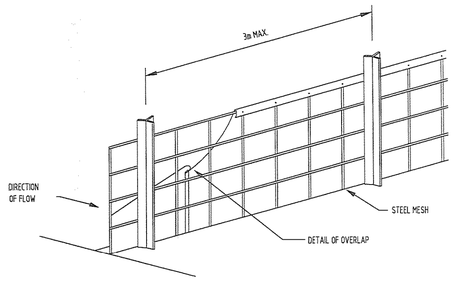

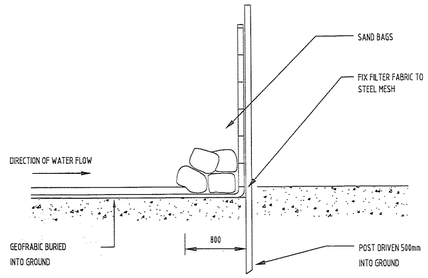

GEOFABRIC SILT FENCE

FENCE SEDIMENT CONTROL

NTS

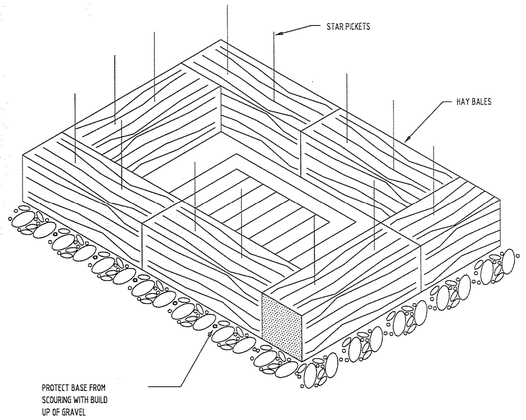

HAY BALE SILT CONTROL

NTS

RECEIVED
- 1 NOV 2013
Ku Ring Gai Council

Issue	Amendment	Date
A	D A SUBMISSION	03.07.12

Client
PYMBLE LADIES COLLEGE
PYMBLE

Architect
PMDL
P O Box 1465
CROWS NEST NSW 2065
Email: pmdl@pmdl.com.au
PH : 02 8458 5500
FAX : 02 8458 5555

Project
PYMBLE LADIES COLLEGE
CONCEPT MASTERPLAN
PHASE 2

Title
HYDRAULIC SERVICES
SEDIMENT & EROSION CONTROL PLAN

Hydraulic Services
SYDNEY ALL SERVICES Pty Ltd
PO BOX 216
THORNLEIGH NSW 2120
Ph: (02) 9962 9658
Email: sasmail@bigpond.com

Date	October 2011
Scales	1:400 @ A1, NTS
Job No.	30442
Drawn	ND/VK
Dwgs In Set	6 IN 6
Drawing No.	H06
Issue	A